Robot Procedure 2018_002	Jan 31st 2018
Information on Backlash checking in Robot Mechanical Units	[Applicable for all Fanuc Robots and Sample explained for AM100iC]

What is Backlash?

In mechanical engineering, **backlash** sometimes called as **lash** or **play.**
Clearance or lost motion in a mechanism caused by gaps between the parts.
It can be defined as "the maximum distance or angle through which any part of a mechanical system may be moved in one direction without applying appreciable force or motion to the next part in mechanical sequence".
On the other hand, the same clearance causes lost motion between reducer input and output shafts.
This phenomena making difficult to achieve accurate positioning in equipment such as instruments, machine tools and **Robots.**

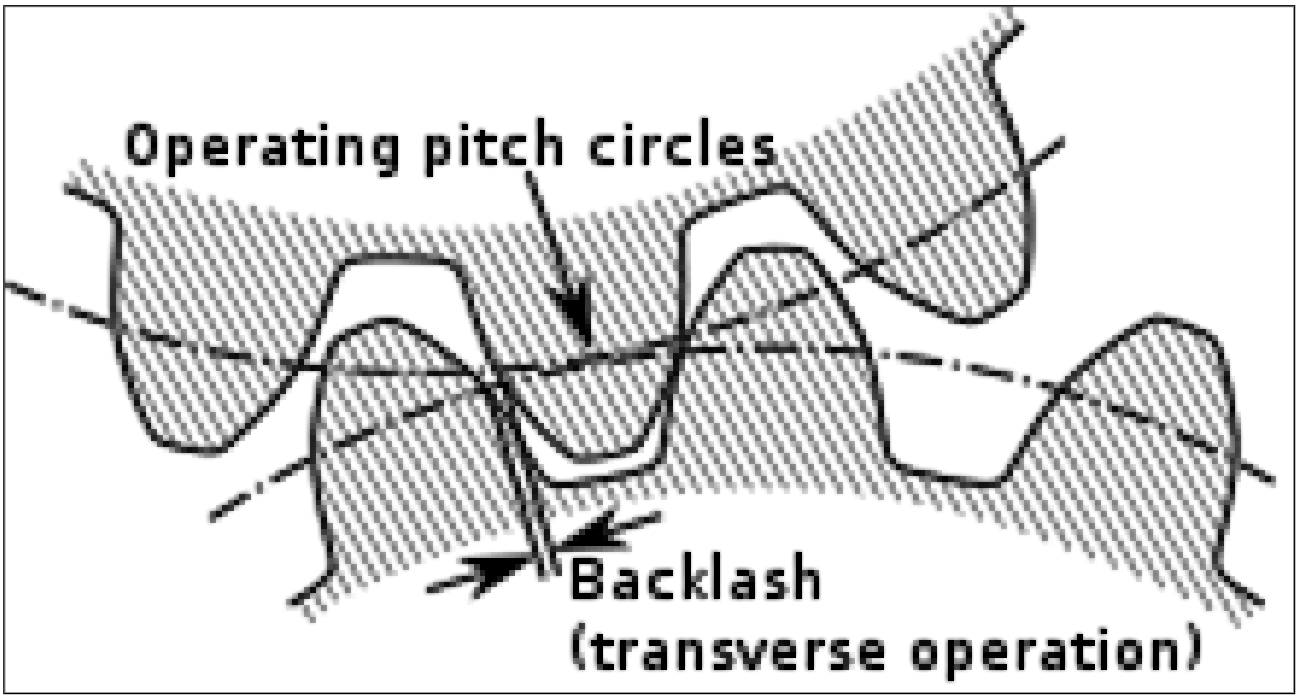

Tools required

- Dial Gauge (0.01mm)
- Magnetic Stand (Flexible & +150mm length)
- Pushpull/Tension Gauge (98N [10kgf])

Backlash Measurement method in Robot Mechanical unit (AM100iC)

1. Maintain the robot in a specified posture as per described in the maintenance manual for each robot model
2. Apply positive and negative loads to each axis. Measure backlash by applying positive and negative loads to each axis three times.
3. Remove the loads and measure the displacement.
4. Average the values measured in the last two measurements for each axis, and use the averages as a measured backlash for the respective axes.
5. **B = (B2+B3)/2 [Backlash = (Mesurement#2 + Measurment#3)/2**
6. Please refer the below flow diagram to measure the backlash with specification for force applied and measurements

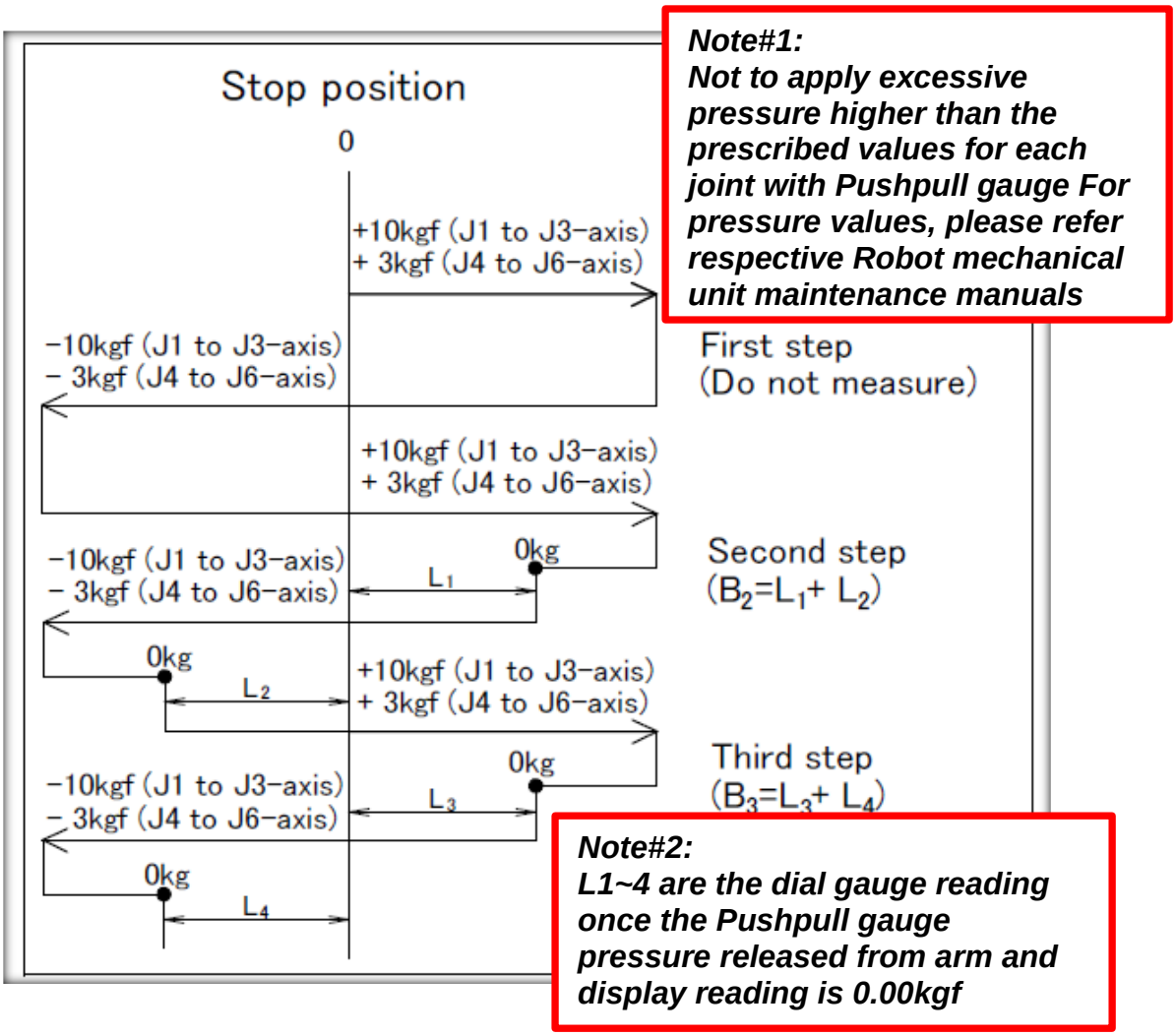

7. Robot postures for backlash measurement on J1 axis

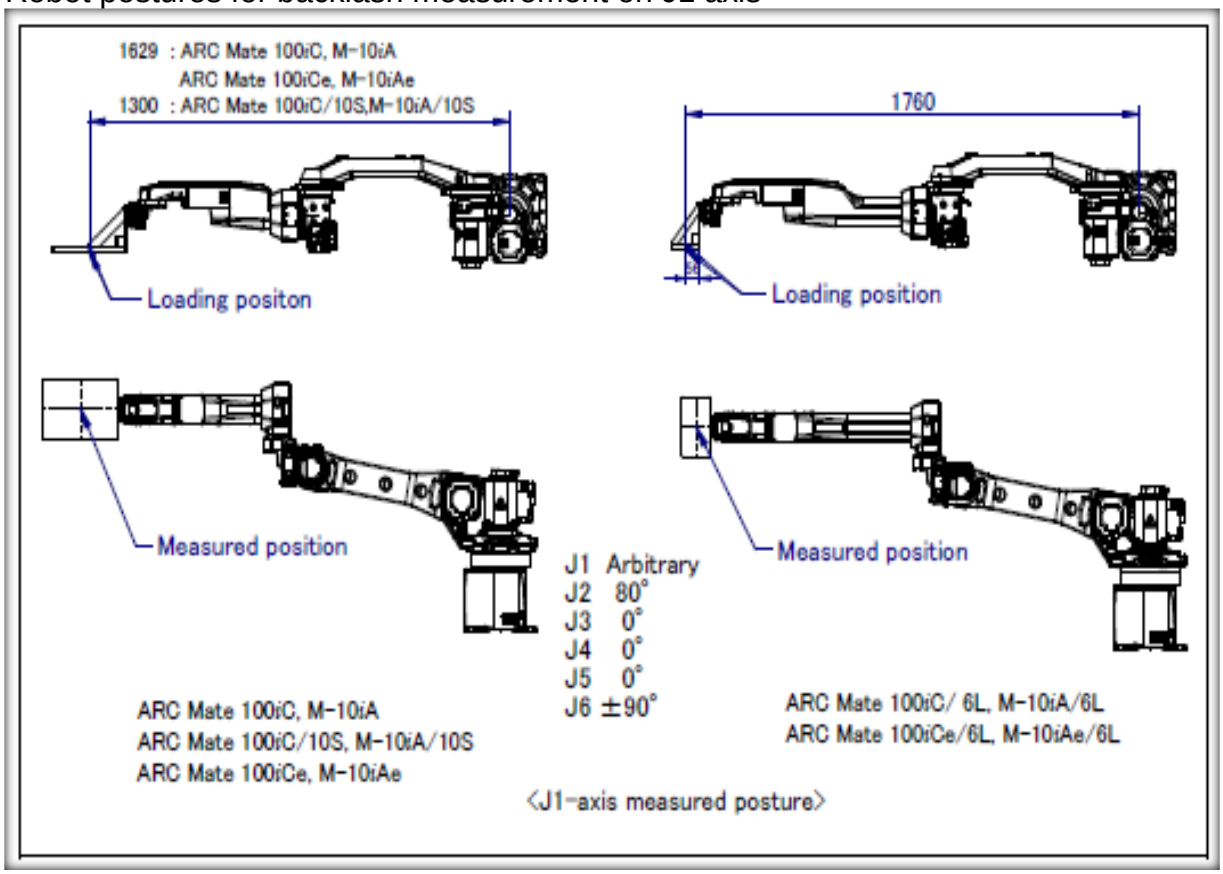

8. Robot Posture for measuring J1 Axis as mentioned in the Respective Robot mechanical unit maintenance manual (Dial Gauge loading ~2mm):

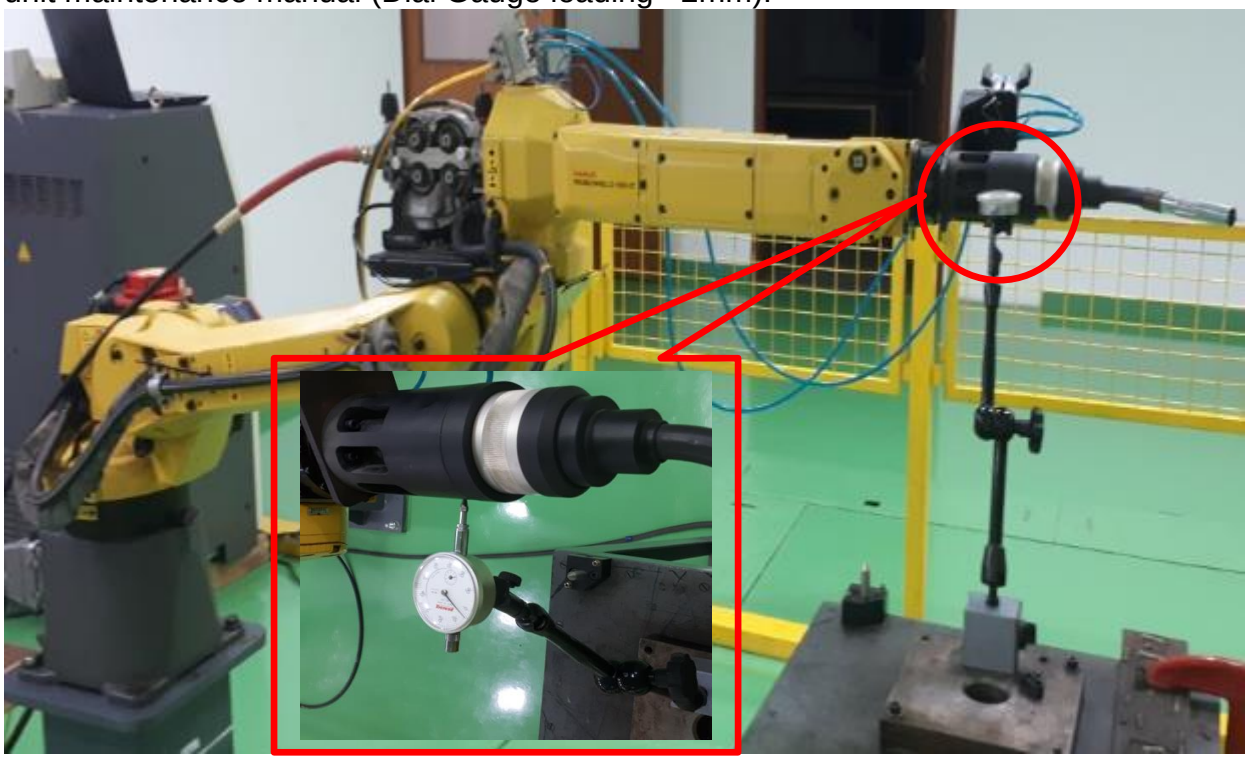

9. Apply **~10kg** force with help of Pushpull gauge on both sides of the Robot arm as shown in the above picture and release the load. Now take the dial gauge reading from your second attempt.

10. Robot postures for backlash measurement on J2 axis as mentioned in the Respective Robot mechanical unit maintenance manual (Dial Gauge loading ~2mm):

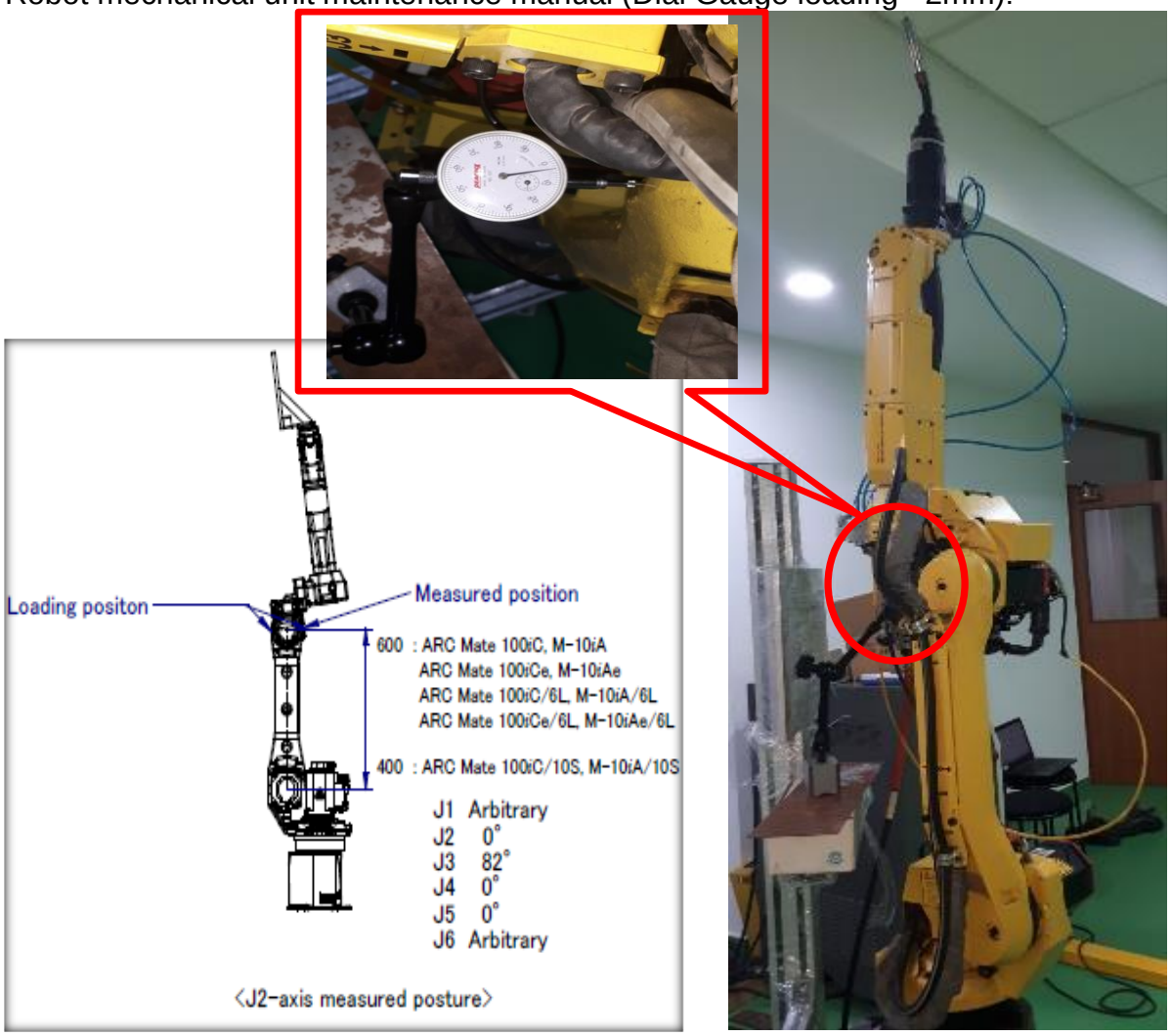

11. Apply **~10kg** force with help of Pushpull gauge on both sides of the Robot arm as shown in the above picture and release the load. Now take the dial gauge reading from your second attempt.

12. Robot postures for backlash measurement on J3 axis as mentioned in the Respective Robot mechanical unit maintenance manual (Dial Gauge loading ~2mm):

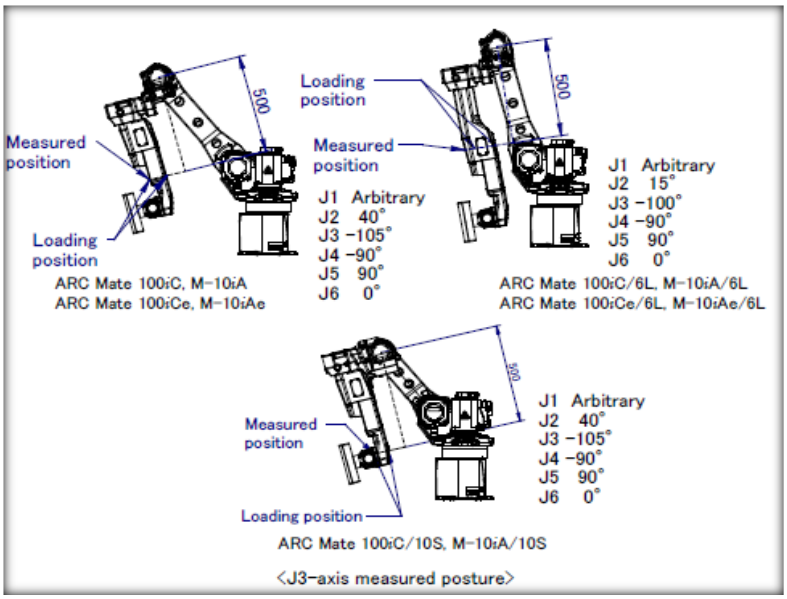

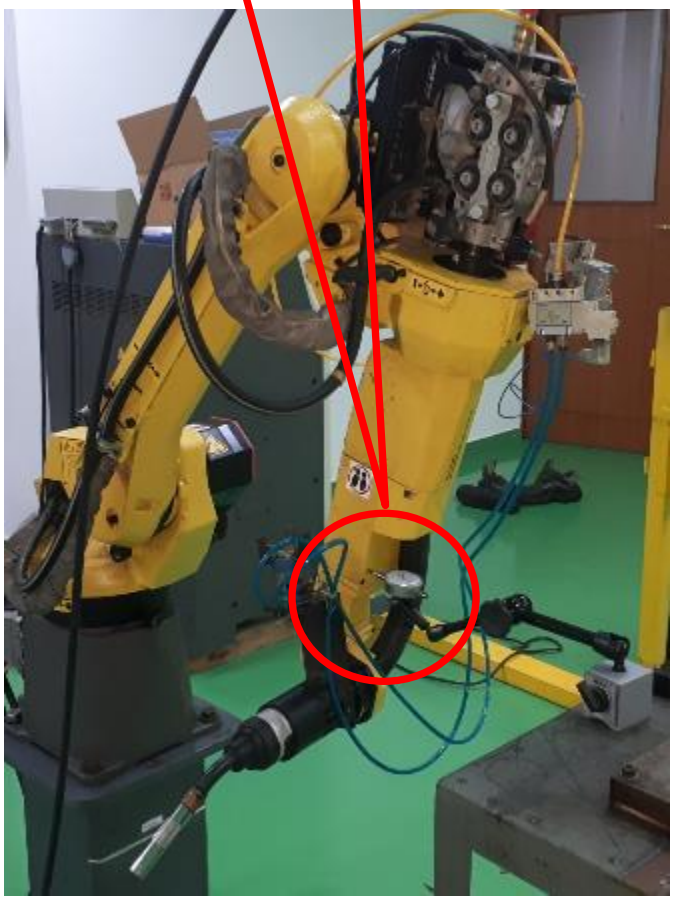

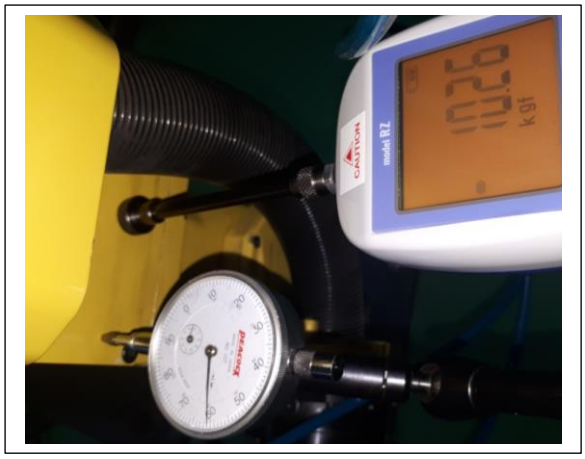

13. Apply **~10kg** force with help of Pushpull gauge on both sides of the Robot arm as shown in the above picture and release the load. Now take the dial gauge reading from your second attempt.

14. Robot postures for backlash measurement on J4 axis as mentioned in the Respective Robot mechanical unit maintenance manual (Dial Gauge loading ~2mm)::

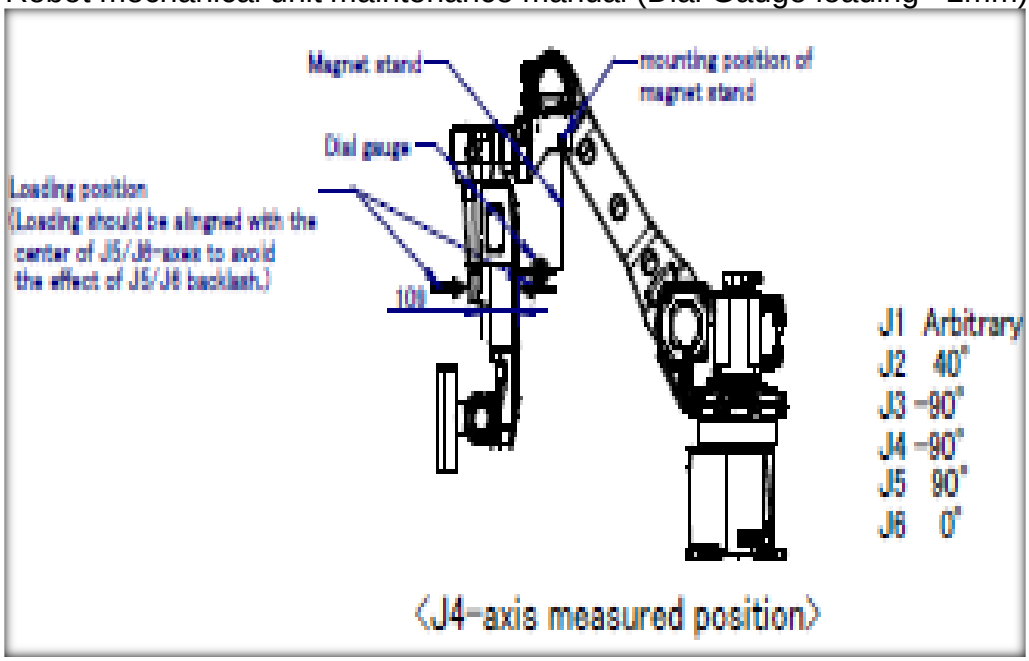

15. Apply **~3.0kg** force with help of Pushpull gauge on both sides of the Robot arm as shown in the above picture and release the load. Now take the dial gauge reading from your second attempt.

16. Robot postures for backlash measurement on J5 axis as mentioned in the Respective Robot mechanical unit maintenance manual (Dial Gauge loading ~2mm):

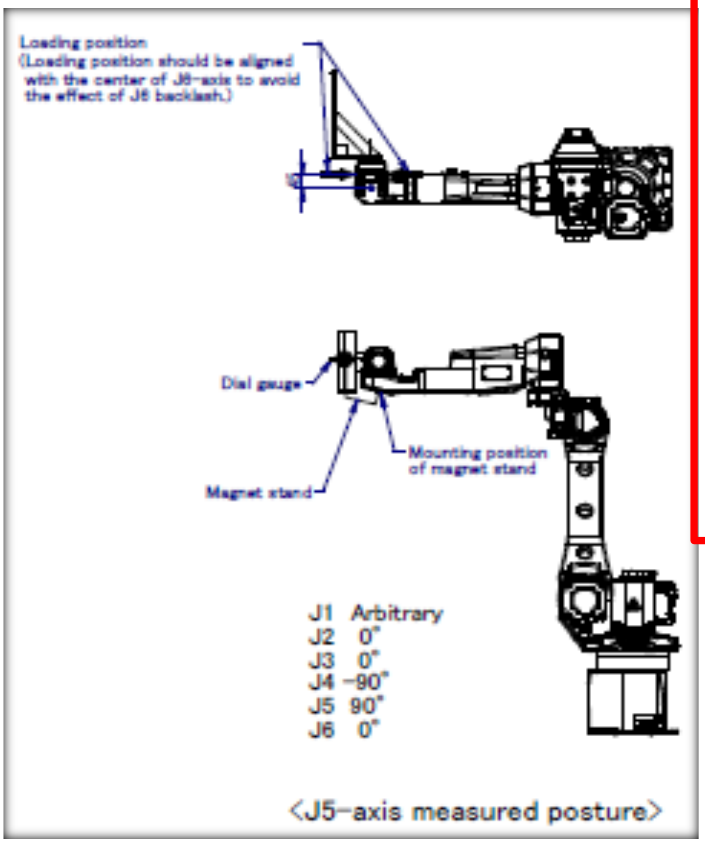

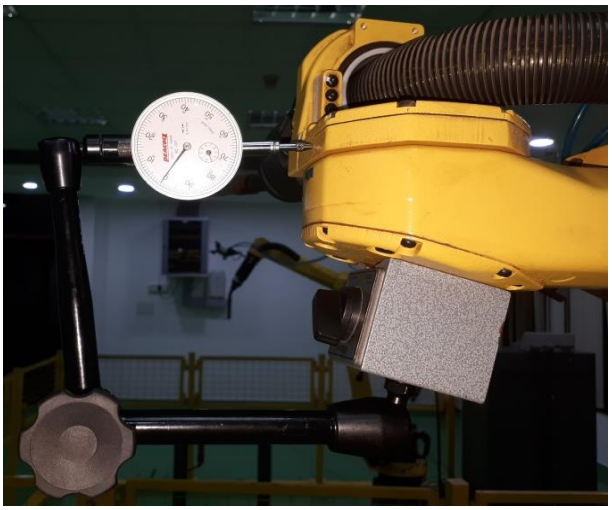

Apply **~3.0kg** force with help of Pushpull gauge on both sides of the Robot arm as shown in the above picture and release the load. Now take the dial gauge reading from your second attempt.

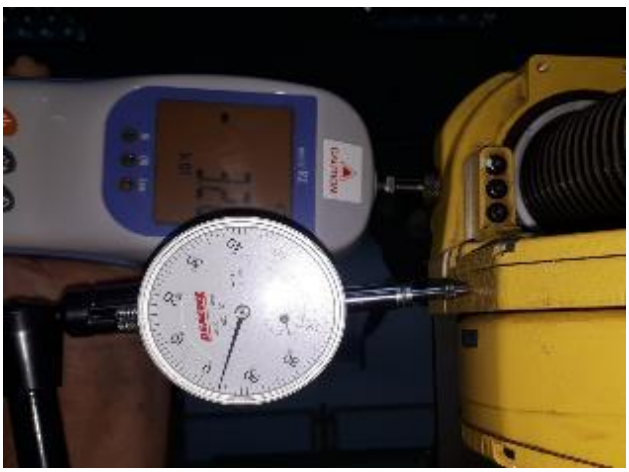

17. Robot postures for backlash measurement on J6 axis as mentioned in the Respective Robot mechanical unit maintenance manual (Dial Gauge loading ~2mm):

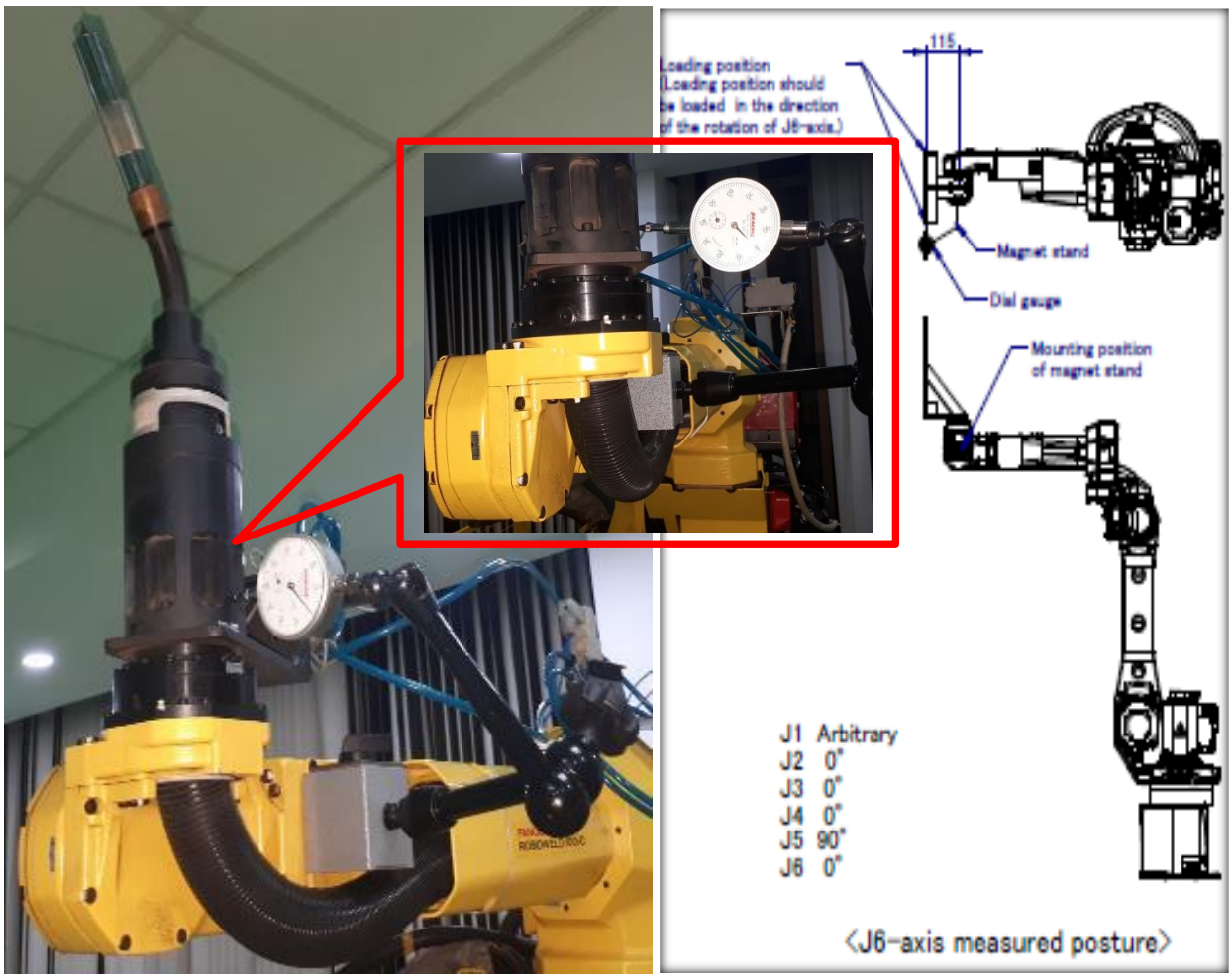

18. Apply **~3.0kg** force with help of Pushpull gauge on both sides of the Robot arm as shown in the above picture and release the load. Now take the dial gauge reading from your second attempt.

19. Checking the Backlash result
Calculate the individual axis Backlash values and compare with the tables as recommended for each Robot mechanical unit maintenance manual.

20. For example permissible backlash value for ARC Mate 100iC, ARC Mate 100iCe are listed below:

	J1-axis	J2-axis	J3-axis	J4-axis	J5-axis	J6-axis
Angle conversion (arc-min)	2.50	2.50	2.50	3.00	3.00	5.00
Displacement conversion (mm)	1.23	0.33	0.31	0.10	0.04	0.17
Distance between the rotation center and dial gauge (mm)	1629	600	500	109	45	115.

Note:

- *When measuring backlash under circumstances where the distance between the rotation center and the dial gauge is different from those in the above table, make angel and displacement conversion accordingly to the table. Displacement conversion (mm) should be within the limits.*
- *For the Robots with the balancer, force or gravity is always applied to the J2-axis, so the backlash of the J2-axis cannot be measured.*

When and why to check backlash?
Symptoms:

- Mechanical unit arm motion is not smooth (or) Continues Rattling in arms motion, etc.,

Description:
Backlash is greater than the tolerance stated in the applicable maintenance manual. (Please check the permissible backlash values table in respective Robot mechanical maintenance manual)

Cause → Increase in backlash:

- It is likely that excessive force applied to the drive mechanism, due to a collision or Overload, has broken a gear or the inside of the reducer, resulting in an increase for backlash.
- It is likely that prolonged use has caused the tooth surfaces of a gear and the inside of the reducer to wear out, resulting in an increase for backlash.
- It is likely that prolonged use without changing the grease has caused the tooth surfaces of a gear and the inside of the reducer to wear out, resulting in an increase in the amount of backlash

Measure and remedy:

- Operate one axis at a time to determine which axis has the increased backlash.
- Remove the motor, and check whether any of its gears are broken. If any gear is broken, replace it.
- Check whether any other gear of the drive mechanism is damage. If there is no damage gear, replace the reducer.
- If the reducer is broken, or if a gear tooth is missing, replace the relevant component. Also, remove all the grease or oil from the gearbox and wash the inside of the gearbox.
- After replacing the gear or reducer, add an appropriate amount of grease or oil.
- Using the robot within its maximum rating to prevent problems with the drive mechanism.
- Regularly applying the grease or oil with a specified type can help prevent problems.